www.twazo.in

TWAZO

Architectural Hardware...

PRICE LIST 2022

Door and Window Fittings | Drawer Slides & Hinges
Door Control Devices | Glass Architectural Hardware | Door Handles

W.E.F April-2022

TWAZO
Architectural Hardware...

Introduction

In the world of architectural hardware, Twazo Architectural hardware is a name that everyone associates with security, trust, and elegance. As one of the leading global manufacturers, Importer & Exporter of Door & Window Fittings, locking mechanism, Glass Architectural Hardware, Door Control Devices, Furniture fittings and Door Handles, the journey towards earning worldwide recognition is one that has taken constant dedication to innovation, adhering to quality, and a passion for excellence.

Our journey

Our journey began in 2003, when our founder, envisioned a Pan-India venture that would provide home and office owners with high-quality security hardware solutions which would not only bring peace of mind but also a touch of class to their home & establishments. With this vision, the company launched its first product in 2006 and has, over the decade, built up a diverse portfolio of offerings and an equally diverse clientele ranging from hospitality to healthcare, banking & finance and other sectors.

An ISO 9001 2015 Certified Company

Our vision

We believe that our key value proposition is our understanding & commitment to adhere to the highest technological standards and that our popularity is a testament to our strong manufacturing capabilities, customer-centricity, and best-in-class sustainable business practices. We are led by a young, enthusiastic and forward-looking management, and continue our upward trajectory with a shared vision of delivering both excellence and trust.

Our Product Range:

Door and Window Fittings
Drawer Slides & Hinges
Door Control Devices
Glass Architectural Hardware
Door Handles

TWAZO
Architectural Hardware...

INDEX

Door & Window Fittings

Hinges	1-4
Tower Bolt	5-7
Aldrop	8
Door Kit	9
Latches	10
Handles	11
Door Stopper	12
Accessories	13
Mortise Handles & Lock Body	14-18
Door Closer	19-20
Door Sliding Fittings	21

Furniture Fittings

Drawer Channels	22-23
Hydraulic Hinges	24
Drawer Box	25
Wardrobe Sliding Fittings	26

Glass Architectural Hardware

Floor Spring	27
Patch Set	28
Patch Fittings	29
Shower Hinges	30
Glass Connectors	31
Shower Sliding Set	32-34
Plastic Profiles	35
Glass Locks	36
Door Handles	37
Friction Stay	38

TWAZO
Architectural Hardware...

HINGES

FOUR BALL BEARING HINGES SS.304

Code	Size	Pcs./Box	Box/Case	Pcs./Case	Price/Pc.
THG4334BS	4"x3"x3mm	20	8	160	325.00
THG5334BS	5"x3"x3mm	10	12	120	390.00
THG6334BS	6"x3"x3mm	10	12	120	455.00

DOUBLE BALL BEARING HINGES SS.304

Code	Size	Pcs./Box	Box/Case	Pcs./Case	Price/Pc.
THG3252BS	3"x2.5"x2.5mm	20	12	240	185.00
THG4252BS	4"x3"x2.5mm	20	8	160	260.00
THG5252BS	5"x3"x2.5mm	10	12	120	300.00
THG4332BS	4"x3"x3mm	20	8	160	290.00
THG5332BS	5"x3"x3mm	10	12	120	340.00

SUPREME HEAVY BUTT HINGES SS.304

Code	Size	Pcs./Box	Box/Case	Pcs./Case	Price/Pc.
THG315S	3"x1.8mm	30	16	480	78.00
THG312S	3"x1"x2.5mm	30	12	360	117.00
THG412S	4"x1"x2.5mm	20	12	240	170.00
THG512S	5"x1"x2.5mm	10	24	240	220.00
THG410S	4"x1.25"x3mm	20	8	160	260.00
THG510S	5"x1.25"x3mm	10	12	120	325.00
THG610S	6"x1.25"x3mm	10	12	120	390.00

MAKE IN INDIA

TWAZO
Architectural Hardware...

HINGES

FOUR BALL BEARING HINGES

Code	Size	Pcs./Box	Box/Case	Pcs./Case	Price/Pc.
THG4334B	4"x3"x3mm	20	8	160	230.00
THG5334B	5"x3"x3mm	10	12	120	260.00
THG6334B	6"x3"x3mm	10	12	120	300.00

DOUBLE BALL BEARING HINGES

Code	Size	Pcs./Box	Box/Case	Pcs./Case	Price/Pc.
THG3252B	3"x2.5"x2.5mm	20	12	240	145.00
THG4252B	4"x3"x2.5mm	20	8	160	185.00
THG5252B	5"x3"x2.5mm	10	12	120	220.00
THG4332B	4"x3"x3mm	20	8	160	215.00
THG5332B	5"x3"x3mm	10	12	120	250.00
THG5352B	5"x3.5"x3mm	10	12	120	364.00

PARLIAMENT MOON TYPE HINGES (MATT)

Code	Size	Pcs./Box	Box/Case	Pcs./Case	Price/Pc.
TPHG43	4"x3"x3mm	10	12	120	260.00
TPHG44	4"x4"x3mm	10	12	120	286.00
TPHG45	4"x5"x3mm	10	12	120	338.00
TPHG46	4"x6"x3mm	10	12	120	390.00

MAKE IN INDIA

TWAZO
Architectural Hardware...

WD CONCEALED HINGES

BUTT HINGES (WELDED)

Code	Size	Pcs./Box	Box/Case	Pcs./Case	Price/Pc.
THG315W	3"x1.8mm (3x15)	30	16	480	52.00
THG414W	4"x1.9mm (4x14)	20	12	240	85.00
THG514W	5"x1.9mm (5x14)	10	24	240	111.00
THG312W	3"x1"x2.5mm (3x12)	30	12	360	80.00
THG412W	4"x1"x2.5mm (4x12)	20	12	240	111.00
THG512W	5"x1"x2.5mm (5x12)	10	24	240	143.00
THG612W	6"x1"x2.5mm (6x12)	10	16	160	182.00

RAILWAY/GRANITE HINGES (WELDED)

Code	Size	Pcs./Box	Box/Case	Pcs./Case	Price/Pc.
THG312RW	3"x1"x2.5mm	30	12	360	80.00
THG412RW	4"x1"x2.5mm	20	12	240	111.00
THG512RW	5"x1"x2.5mm	10	24	240	143.00
THG612RW	6"x1"x2.5mm	10	16	160	182.00
THG510W	5"x1"x3mm	10	16	160	175.00
THG4125W	4"x1.25"x3mm	20	8	160	170.00
THG5125W	5"x1.25"x3mm	10	16	160	208.00
THG6125W	6"x1.25"x3mm	10	12	120	247.00
THG515W	5"x1.50"x3mm	10	12	120	260.00
THG615W	6"x1.50"x3mm	10	12	120	300.00
THG815W	8"x1.50"x3mm	8	10	80	415.00

"L" HINGES WELDED

Code	Size	Pcs./Box	Box/Case	Pcs./Case	Price/Pc.
TLHG1306	75x(13x6)x1.7mm	20	16	320	62.00
TLHG1313	75x(13x13)x1.7mm	20	16	320	65.00
TLHG1319	75x(13x19)x1.7mm	20	16	320	68.00

WELDED NARROW & CUT HINGES

Code	Size	Pcs./Box	Box/Case	Pcs./Case	Price/Pc.
THG751913W	75x19x13mm	45	16	720	40.00
THG1001913W	100x19x13mm	30	12	360	55.00
THG751919W	75x19x19mm	45	12	540	42.00
THG1001919W	100x19x19mm	30	12	360	63.00
THG752525W	75x25x25mm	30	16	480	62.00

Flap thickness 1.70mm

MAKE IN INDIA

TWAZO
Architectural Hardware...

HINGES

RIVETED BUTT HINGES (HEAVY)

Code	Size	Pcs./Box	Box/Case	Pcs./Case	Price/Pc.
THG315	3"x1.8mm (3x15)	30	16	480	40.00
THG414	4"x1.9mm (4x14)	20	12	240	70.00
THG514	5"x1.9mm (5x14)	10	24	240	94.00
THG312	3"x1"x2.5mm (3x12)	30	12	360	65.00
THG412	4"x1"x2.5mm (4x12)	20	12	240	95.00
THG512	5"x1"x2.5mm (5x12)	10	24	240	125.00
THG612	6"x1"x2.5mm (6x12)	10	16	160	160.00

NARROW & CUT FURNITURE HINGES

Code	Size	Pcs./Box	Box/Case	Pcs./Case	Price/Pc.
THG751510	75x15x10mm	60	16	960	32.00
THG751913	75x19x13mm	45	16	720	35.00
THG1001913	100x19x13mm	30	12	360	50.00
THG751919	75x19x19mm	45	12	540	38.00
THG1001919	100x19x19mm	30	12	360	55.00
THG751325	75x13x25mm	45	12	540	42.00
THG1001325	100x13x25mm	30	12	360	54.00
THG751925	75x19x25mm	45	12	540	44.00
THG1001925	100x19x25mm	30	12	360	62.00
THG752710	75x27x10mm	45	12	540	40.00
THG602710	60x27x10mm	45	16	720	34.00
THG752525	75x25x25mm	30	16	480	52.00

Flap thickness 1.70mm

FLUSH HINGES (DOUBLE BALL BEARING HINGES)

Code	Size	Pcs./Box	Box/Case	Pcs./Case	Price/Pc.
TFHG43	4"x3"x2.5"mm	20	8	160	130.00
TFHG53	5"x3"x3"mm	10	12	120	180.00

MAKE IN INDIA

TWAZO
Architectural Hardware...

TOWER BOLTS

SECTION HALF ROUND TOWER BOLT (12mm ROD)

Code	Size	Pcs./Box	Box/Case	Pcs./Case	Price/Pc.
TTB1412	4″	12	20	240	167.00
TTB1612	6″	6	30	180	250.00
TTB1812	8″	6	20	120	333.00
TTB11012	10″	6	20	120	416.00
TTB11212	12″	6	20	120	500.00
TTB11812	18″	6	10	60	749.00

SECTION HALF ROUND TOWER BOLT (10mm ROD)

Code	Size	Pcs./Box	Box/Case	Pcs./Case	Price/Pc.
TTB1410	4″	12	20	240	130.00
TTB1610	6″	6	30	180	195.00
TTB1810	8″	6	20	120	260.00
TTB11010	10″	6	20	120	325.00
TTB11210	12″	6	20	120	390.00
TTB11810	18″	6	10	60	585.00

SLEEK TOWER BOLT 2-IN-1 (12mm ROD)

Code	Size	Pcs./Box	Box/Case	Pcs./Case	Price/Pc.
TTB2412	4″	12	20	240	156.00
TTB2612	6″	6	30	180	235.00
TTB2812	8″	6	20	120	312.00
TTB21012	10″	6	20	120	390.00
TTB21212	12″	6	20	120	468.00
TTB21812	18″	6	10	60	632.00

SLEEK TOWER BOLT 2-IN-1 (10mm ROD)

Code	Size	Pcs./Box	Box/Case	Pcs./Case	Price/Pc.
TTB2410	4″	12	20	240	104.00
TTB2610	6″	6	30	180	156.00
TTB2810	8″	6	20	120	208.00
TTB21010	10″	6	20	120	260.00
TTB21210	12″	6	20	120	312.00
TTB21810	18″	6	10	60	468.00

MAKE IN INDIA

TWAZO
Architectural Hardware...

TOWER BOLTS

HALF SQUARE TOWER BOLT (12mm ROD)

Code	Size	Pcs./Box	Box/Case	Pcs./Case	Price/Pc.
TTB3412	4″	12	20	240	128.00
TTB3612	6″	6	30	180	192.00
TTB3812	8″	6	20	120	256.00
TTB31012	10″	6	20	120	325.00
TTB31212	12″	6	20	120	384.00
TTB31812	18″	6	10	60	585.00

HALF SQUARE TOWER BOLT (10mm ROD)

Code	Size	Pcs./Box	Box/Case	Pcs./Case	Price/Pc.
TTB3410	4″	12	20	240	99.00
TTB3610	6″	6	30	180	148.00
TTB3810	8″	6	20	120	200.00
TTB31010	10″	6	20	120	250.00
TTB31210	12″	6	20	120	300.00
TTB31810	18″	6	10	60	450.00

HALF ROUND TOWER BOLT (12mm ROD)

Code	Size	Pcs./Box	Box/Case	Pcs./Case	Price/Pc.
TTB4412	4″	12	20	240	132.00
TTB4612	6″	6	30	180	198.00
TTB4812	8″	6	20	120	264.00
TTB41012	10″	6	20	120	330.00
TTB41212	12″	6	20	120	396.00
TTB41812	18″	6	10	60	594.00

HALF ROUND TOWER BOLT (10mm ROD)

Code	Size	Pcs./Box	Box/Case	Pcs./Case	Price/Pc.
TTB4410	4″	12	20	240	104.00
TTB4610	6″	6	30	180	156.00
TTB4810	8″	6	20	120	208.00
TTB41010	10″	6	20	120	260.00
TTB41210	12″	6	20	120	315.00
TTB41810	18″	6	10	60	468.00

MAKE IN INDIA

TWAZO
Architectural Hardware...

TOWER BOLTS

HALF ROUND TOWER BOLT SINGLE ROD (12mm)

Code	Size	Pcs./Box	Box/Case	Pcs./Case	Price/Pc.
TTB5412	4″	12	20	240	116.00
TTB5612	6″	6	30	180	174.00
TTB5812	8″	6	20	120	232.00
TTB51012	10″	6	20	120	285.00
TTB51212	12″	6	20	120	344.00

HALF ROUND TOWER BOLT SINGLE ROD (10mm)

Code	Size	Pcs./Box	Box/Case	Pcs./Case	Price/Pc.
TTB5310	3″	12	20	240	72.00
TTB5410	4″	12	20	240	80.00
TTB5610	6″	6	30	180	120.00
TTB5810	8″	6	20	120	160.00
TTB51010	10″	6	20	120	200.00
TTB51210	12″	6	20	120	240.00

L-TOWER BOLT (10mm)

Code	Size	Pcs./Box	Box/Case	Pcs./Case	Price/Pc.
TTB6410	4″x10	12	20	240	130.00
TTB6610	6″x10	6	30	180	182.00
TTB6810	8″x10	6	20	120	234.00
TTB61210	12″X10	6	20	120	338.00

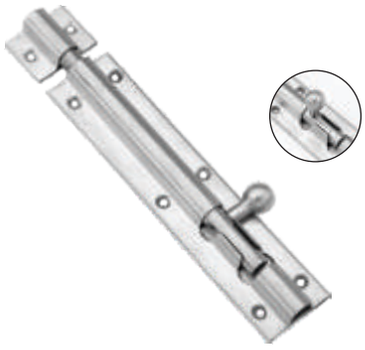

HALF ROUND FOOTBALL TOWER BOLT (10mm ROD)

Code	Size	Pcs./Box	Box/Case	Pcs./Case	Price/Pc.
TTB7410	4″	12	20	240	112.00
TTB7610	6″	6	30	180	168.00
TTB7810	8″	6	20	120	224.00
TTB71010	10″	6	20	120	260.00
TTB71210	12″	6	20	120	312.00
TTB71810	18″	6	10	60	468.00

MAKE IN INDIA

AL-DROPS

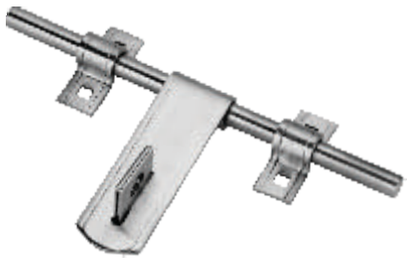

STRAIGHT AL-DROP (14mm)

Code	Size	Pcs./Box	Box/Case	Pcs./Case	Price/Pc.
TLD6814	8″ (2+1)	6	12	72	250.00
TLD61014	10″ (3+1)	6	12	72	286.00
TLD61214	12″ (3+1)	6	10	60	312.00

Note : Extra Nuckle for 30/- Extra Kunda for 40/-

DOTTED AL-DROP (14mm)

Code	Size	Pcs./Box	Box/Case	Pcs./Case	Price/Pc.
TLD1814	8″ (2+1)	6	12	72	250.00
TLD11014	10″ (3+1)	6	12	72	286.00
TLD11214	12″ (3+1)	6	10	60	312.00

Note : Extra Nuckle for 30/- Extra Kunda for 40/-

SLEEK AL-DROP (14mm)

Code	Size	Pcs./Box	Box/Case	Pcs./Case	Price/Pc.
TLD2814	8″ (2+1)	1	40	40	380.00
TLD21014	10″ (3+1)	1	40	40	416.00
TLD21214	12″ (3+1)	1	40	40	442.00

Note : Extra Nuckle for 30/- Extra Kunda for 70/-

ROYAL AL-DROP (16mm)

Code	Size	Pcs./Box	Box/Case	Pcs./Case	Price/Pc.
TLD3816	8″ (2+1)	1	40	40	525.00
TLD31016	10″ (3+1)	1	40	40	600.00
TLD31216	12″ (3+1)	1	40	40	645.00

Note : Extra Nuckle for ₹0/- Extra Kunda for 90/-

SOLID STRAIGHT AL-DROP (16mm)

Code	Size	Pcs./Box	Box/Case	Pcs./Case	Price/Pc.
TLD4816	8″ (2+1)	1	40	40	610.00
TLD41016	10″ (3+1)	1	40	40	715.00
TLD41216	12″ (3+1)	1	40	40	740.00

TWAZO
Architectural Hardware...

AL-DROPS

SOLID BEND AL-DROP (16mm)					
Code	Size	Pcs./Box	Box/Case	Pcs./Case	Price/Pc.
TLD5816	8" (2+1)	1	40	40	610.00
TLD51016	10" (3+1)	1	40	40	715.00
TLD51216	12" (3+1)	1	40	40	740.00

Note : Extra Nuckle for 70/- Extra Kunda for 90/-

DOOR KIT

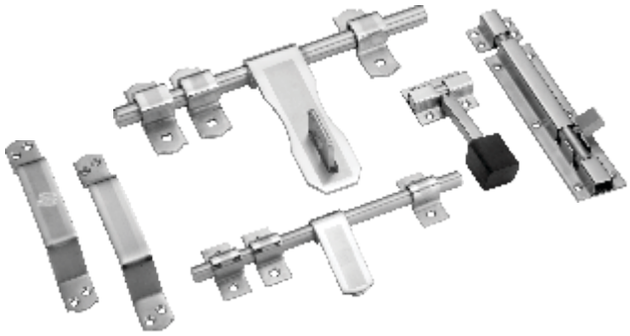

•DOOR KIT 16MM ROYAL

MRP ₹ - 1350/-

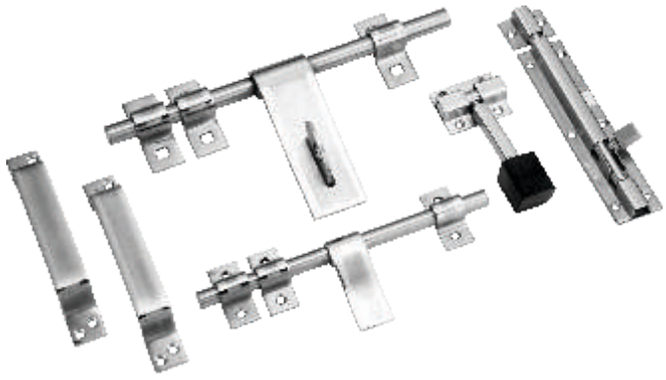

• DOOR KIT 16MM SLEEK

MRP ₹ - 1350/-

• DOOR KIT 14MM SLEEK

MRP ₹ - 1100/-

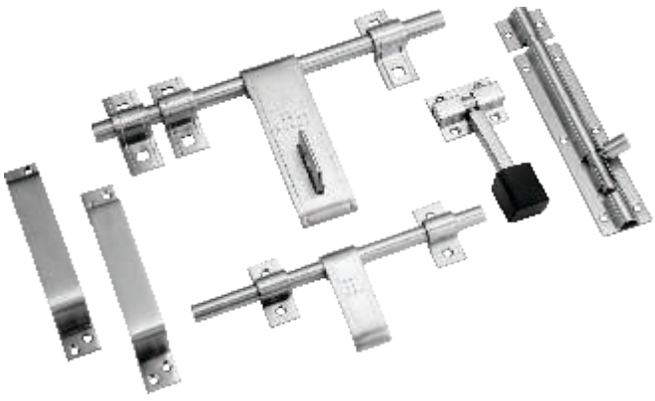

• DOOR KIT 14MM DOTED

MRP ₹ - 850/-

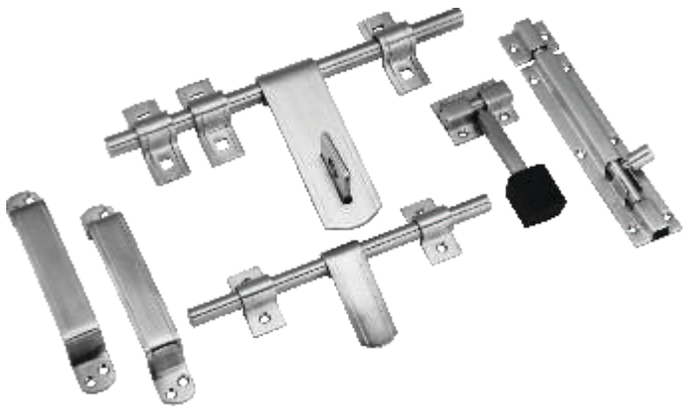

• DOOR KIT 14MM STRAIGHT

MRP ₹ - 850/-

MAKE IN INDIA

TWAZO
Architectural Hardware...

LATCHES

DOTTED LATCH (12mm)

Code	Size	Pcs./Box	Box/Case	Pcs./Case	Price/Pc.
TLH18	8″	6	20	120	182.00
TLH110	10″	6	20	120	195.00
TLH112	12″	6	20	120	208.00

SLEEK LATCH (12mm)

Code	Size	Pcs./Box	Box/Case	Pcs./Case	Price/Pc.
TLH28	8″	6	20	120	195.00
TLH210	10″	6	20	120	208.00
TLH212	12″	6	20	120	220.00

ROYAL LATCH (12mm)

Code	Size	Pcs./Box	Box/Case	Pcs./Case	Price/Pc.
TLH38	8″	6	20	120	195.00
TLH310	10″	6	20	120	210.00
TLH312	12″	6	20	120	225.00

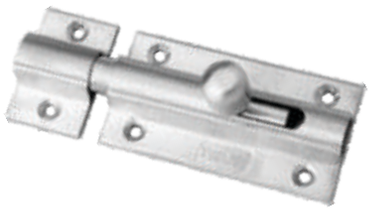

BABY LATCH HALF ROUND (12mm)

Code	Size	Pcs./Box	Box/Case	Pcs./Case	Price/Pc.
TLH43	3″	10	18	180	156.00

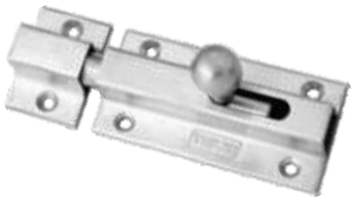

BABY LATCH HALF SQUARE (12mm)

Code	Size	Pcs./Box	Box/Case	Pcs./Case	Price/Pc.
TLH53	3″	10	18	180	143.00

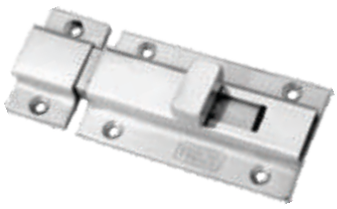

DUSTER BABY LATCH (2-in-1)

Code	Size	Pcs./Box	Box/Case	Pcs./Case	Price/Pc.
TLH63	3″	10	12	120	208.00
TLH64	4″	10	12	120	234.00

MAKE IN INDIA

TWAZO
Architectural Hardware...

HANDLES

D HANDLE

Code	Size	Pcs./Box	Box/Case	Pcs./Case	Price/Pc.
THDL14	4"x3.00mm	24	20	480	48.00
THDL15	5"x3.00mm	12	20	240	52.00
THDL16	6"x3.00mm	12	20	240	58.00
THDL18	8"x3.00mm	12	20	240	78.00

D HANDLE (Two Tone)

Code	Size	Pcs./Box	Box/Case	Pcs./Case	Price/Pc.
THDL24	4"x3.00mm	24	20	480	65.00
THDL25	5"x3.00mm	12	20	240	72.00
THDL26	6"x3.00mm	12	20	240	78.00
THDL28	8"x3.00mm	12	20	240	98.00

A-ONE HANDLE

Code	Size	Pcs./Box	Box/Case	Pcs./Case	Price/Pc.
THDL35	5"x3.00mm	12	20	240	65.00
THDL36	6"x3.00mm	12	20	240	72.00

STARAIGHT HANDLE MATT

Code	Size	Pcs./Box	Box/Case	Pcs./Case	Price/Pc.
THDL64	4"x3.00mm	24	20	480	55.00
THDL65	5"x3.00mm	12	20	240	60.00
THDL66	6"x3.00mm	12	20	240	65.00
THDL68	8"x3.00mm	12	20	240	85.00

ROYAL HANDLE (Two Tone)

Code	Size	Pcs./Box	Box/Case	Pcs./Case	Price/Pc.
THDL44	4"x3.00mm	24	20	480	75.00
THDL45	5"x3.00mm	12	20	240	82.00
THDL46	6"x3.00mm	12	20	240	90.00
THDL48	8"x3.00mm	12	20	240	115.00

SLEEK HANDLE

Code	Size	Pcs./Box	Box/Case	Pcs./Case	Price/Pc.
THDL55	5" x3.00mm	20	20	400	70.00
THDL57	7" x3.00mm	20	20	400	78.00

MAKE IN INDIA

TWAZO
Architectural Hardware...

DOOR STOPPER

DOOR STOPPER

HALF SQUARE DOOR STOPPER (DOUBLE ROD)

Code	Size	Pcs./Box	Box/Case	Pcs./Case	Price/Pc.
TDS13	3"x10mm	8	20	160	125.00
TDS14	4"x12mm	8	20	160	208.00

SLEEK DOOR STOPPER (12mm)

Code	Size	Pcs./Box	Box/Case	Pcs./Case	Price/Pc.
TDS24	4" Single Leg	10	20	200	138.00
TDS25	5" Single Leg	10	20	200	195.00

DOOR SILENCER

DOOR SILENCER

Code	Size	Pcs./Box	Box/Case	Pcs./Case	Price/Pc.
TDS3	3"	10	24	240	104.00

GATE HOOKS

GATE HOOK SQUARE

Code	Size	Pcs./Box	Box/Case	Pcs./Case	Price/Pc.
TGHS2	2"	48	20	960	36.00
TGHS25	2.5"	48	20	960	39.00
TGHS3	3"	24	20	480	47.00
TGHS4	4"	24	20	480	49.00
TGHS5	5"	24	20	480	52.00
TGHS6	6"	24	20	480	54.00

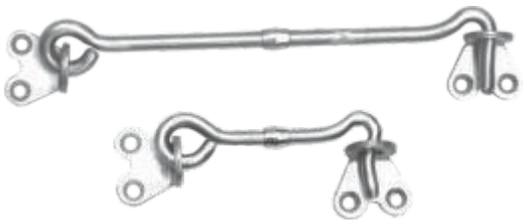

GATE HOOK ROUND

Code	Size	Pcs./Box	Box/Case	Pcs./Case	Price/Pc.
TGHR2	2"	48	20	960	36.00
TGHR25	2.5"	48	20	960	39.00
TGHR3	3"	24	20	480	42.00
TGHR4	4"	24	20	480	44.00
TGHR5	5"	24	20	480	47.00
TGHR6	6"	24	20	480	50.00

MAKE IN INDIA

DOOR CHAIN

Also Availabe in Antique Finish

DOOR CHAIN					
Code	**Size**	**Pcs./Box**	**Box/Case**	**Pcs./Case**	**Price/Pc.**
TDC	-	40	4	160	335.00

DOOR MAGNET

Also Availabe in Antique Finish

DOOR MAGNET (FAT LADY)					
Code	**Size**	**Pcs./Box**	**Box/Case**	**Pcs./Case**	**Price/Pc.**
TDM1	4"	-	-	200	230.00

DOOR MAGNET (BELL)					
Code	**Size**	**Pcs./Box**	**Box/Case**	**Pcs./Case**	**Price/Pc.**
TDM2	3"	-	-	200	150.00

SS PIPE

STAINLESS STEEL WARDROBE RAIL (OVAL)				
Code	**Size**	**Packing**	**Avg.Weight**	**Price/Pc.**
TSSR-O	30x15x3660MM (12') Oval	40 Pcs. / Bdl.	1.350 kg	

WARDROBE RAIL (OVAL) BRACKET				
Code	**Size**	**Packing**	**Avg.Weight**	**Price/Pair.**
TSSRA-1	15x30	-	-	130.00

MAKE IN INDIA

MORTISE HANDLES

Plate Handle
S.S 304

NOTCH			
Article No.	**Description**	**Pair/case**	**Price/pair**
MLC-01KY	8" KY Lock (Handle set + 6 Lever lock Body 3 key)	12	1755/-
MLC-01CY	8" CY Lock (Handle set + CY lock Body +60mm OSK)	12	2795/-

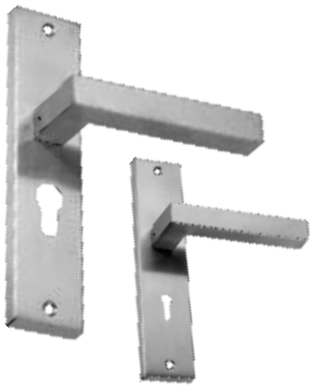

GLIDE			
Article No.	**Description**	**Pair/case**	**Price/pair**
MLC-02KY	8" KY Lock (Handle set + 6 Lever Lock Body 3 key)	12	1885/-
MLC-02CY	8" CY Lock (Handle set + CY lock Body + 60mm OSK)	12	2925/-

OLA			
Article No.	**Description**	**Pair/case**	**Price/pair**
MLC-03KY	8" KY Lock (Handle set + 6 Lever Lock Body 3 key)	12	1835/-
MLC-03CY	8" CY Lock (Handle set + CY lock Body + 60mm OSK)	12	2890/-

TILT			
Article No.	**Description**	**Pair/case**	**Price/pair**
MLC-04KY	8" KY Lock (Handle set + 6 Lever Lock Body 3 key)	12	1885/-
MLC-04CY	8" CY Lock (Handle set + CY lock Body + 60mm OSK)	12	2925/-

TWAZO
Architectural Hardware...

MORTISE HANDLES

Rose Handle
S.S 304

KITE			
Article No.	**Description**	**Pair/case**	**Price/pair**
MLR-01	Rose Handle	12	2925/-
MLR-01 COMBO	Rose Handle Combo (Handle Set + 10" CY lock Body+60mm OSK)	12	4290/-
MLR-01 H/P	Half Plate Rose Handle	12	3055/-
MLR-01 H/P COMBO	Half Plate Handle Combo (Handle Set +10" CY lock Body+60mm OSK)	12	4420/-

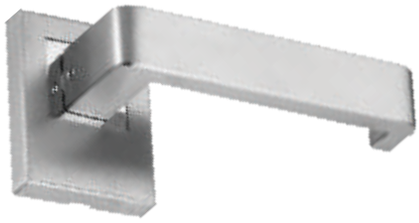

BANTA			
Article No.	**Description**	**Pair/case**	**Price/pair**
MLR-02	Rose Handle	12	3055/-
MLR-02 COMBO	Rose Handle Combo (Handle Set + 10" CY lock Body+60mm OSK)	12	4420/-
MLR-02 BP	10” Plate Handle	12	3105/-
MLR-02 BP COMBO	10 inch Plate Handle Combo (Handle Set + 10" CY lock Body) + 60mm OSK	12	4470/-

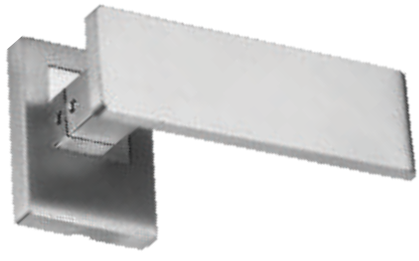

VOLGA			
Article No.	**Description**	**Pair/case**	**Price/pair**
MLR-03	Rose Handle	12	3185/-
MLR-03 COMBO	Rose Handle Combo (Handle Set + 10" CY lock Body+60mm OSK)	12	4550/-
MLR-03 BP	10” Plate Handle	12	3185/-
MLR-03 BP COMBO	10 inch Plate Handle Combo (Handle Set + 10" CY lock Body) + 60mm OSK	12	4550/-

MAKE IN INDIA

MORTISE HANDLES

Rose Handle
S.S 304

ACTIVA			
Article No.	**Description**	**Pair/case**	**Price/pair**
MLR-04	Rose Handle	12	3025/-
MLR-04 COMBO	Rose Handle Combo (Handle Set + 10" CY lock Body+60mm OSK)	12	4390/-
MLR-04 BP	10” Plate Handle	12	3155/-
MLR-04 BP COMBO	10” Plate Handle Combo (Handle Set +10" CY lock Body+60mm OSK)	12	4420/-

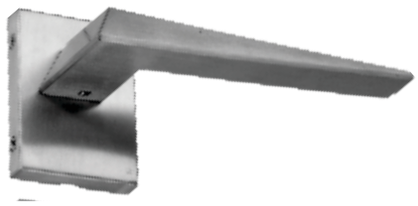

MAZDA			
Article No.	**Description**	**Pair/case**	**Price/pair**
MLR-05	Rose Handle	12	3625/-
MLR-05 COMBO	Rose Handle Combo (Handle Set + 10" CY lock Body+60mm OSK)	12	5090/-
MLR-05 BP	10” Plate Handle	12	3755/-
MLR-05 BP COMBO	10” Plate Handle Combo (Handle Set +10" CY lock Body+60mm OSK)	12	5190/-

CIVIC			
Article No.	**Description**	**Pair/case**	**Price/pair**
MLR-06	Rose Handle	12	3655/-
MLR-06 COMBO	Rose Handle Combo (Handle Set + 10" CY lock Body+60mm OSK)	12	5020/-

CYLINDERS & LOCK BODIES

SINGLE SOLID BOLT CY LOCK BODY

Article No.	Size	Pcs/Box	Pcs/Case	Price/Pc
LB01-10	10"	1	20	910/-
LB01-08	8"	1	20	650/-

ROUND BULLET BOLT CY LOCK BODY

Article No.	Size	Pcs/Box	Pcs/Case	Price/Pc
LB02	10"	1	20	780/-

ROLLING BULLET BOLT CY LOCK BODY

Article No.	Size	Pcs/Box	Pcs/Case	Price/Pc
LB03	10"	1	20	1040/-

6 LEVER SINGLE SOLID BOLT KY LOCK BODY

Article No.	Size	Pcs/Box	Pcs/Case	Price/Pc
LB04	Standard	1	20	470/-

CYLINDERS & LOCK BODIES

LATCH BODY

Article No.	Size	Pcs/Box	Pcs/Case	Price/Pc
LB11	Standard	1	50	470/-

BOTH SIDE ULTRA KEY

Article No.	BSK60	BSK70	BSK80	BSK90
CYLINDER LENGTH	60 MM	70 MM	80 MM	90 MM
PRICE	700/-	755/-	830/-	910/-

ONE SIDE ULTRA KEY & ONE SIDE KNOB

Article No.	OSK60	OSK70	OSK80	OSK90
CYLINDER LENGTH	60 MM	70 MM	80 MM	90 MM
PRICE	780/-	830/-	910/-	990/-

ONE SIDE COIN & ONE SIDE KNOB

Article No.	OSC60	OSC70	OSC80	OSC90
CYLINDER LENGTH	60 MM	70 MM	80 MM	90 MM
PRICE	700/-	755/-	830/-	910/-

DOOR CLOSERS

₹ 1145.00

TDC-51 (ECO DOOR CLOSER)

Features	
Technology	Rack & Pinnion
Closing Force (EN value)	EN:1-2
Maximum door width	850mm
Maximum door weight	40kg
Design	Reversible non-handed design
Power transmission	180-20 degrees
Latching speed range	20-0 degrees
Length	145mm
Width	38mm
Height	55mm

₹ 1185.00

TDC-61 (CLASSIC DOOR CLOSER)

Features	
Technology	Rack & Pinnion
Closing Force (EN value)	EN:2-3
Maximum door width	1000mm
Maximum door weight	60kg
Design	Reversible non-handed design
Power transmission	180-20 degrees
Latching speed range	20-0 degrees
Length	178mm
Width	41mm
Height	63mm

₹ 1885.00

TDC-71 (SLEEK DOOR CLOSER)

Features	
Technology	Rack & Pinnion
Closing Force (EN value)	EN:2-3
Maximum door width	1000mm
Maximum door weight	60kg
Design	Reversible non-handed design
Power transmission	180-15 degrees
Latching speed range	15-0 degrees
Length	218mm
Width	53mm
Height	45mm

DOOR CLOSERS

₹ 3865.00

TDC-81 (PELMET ARM DOOR CLOSER)

Features	
Technology	Rack & Pinnion
Closing Force (EN value)	EN:2-3
Maximum door width	900mm
Maximum door weight	60kg
Design	Reversible non-handed design
Power transmission	180-15 degrees
Latching speed range	15-0 degrees
Length	195mm
Width	38mm
Height	50mm

₹ 3685.00

TDC-91 (CONCEALED DOOR CLOSER)

Features	
Technology	Rack & Pinnion
Closing Force (EN value)	EN:2-3
Maximum door width	900mm
Maximum door weight	60kg
Design	Reversible non-handed design
Power transmission	180-15 degrees
Latching speed range	15-0 degrees
Length	230mm
Width	31mm
Height	55mm

TWAZO
Architectural Hardware...

WOODEN DOOR SLIDING FITTINGS

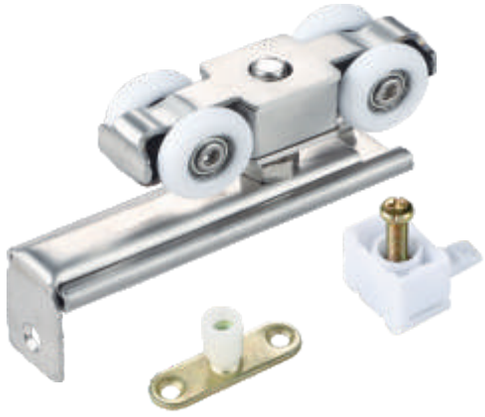

TSD-4W
Sliding Door Wheel Set
(Four Wheel SS Body)
Compatible with Track TST-02
₹ 900/Set

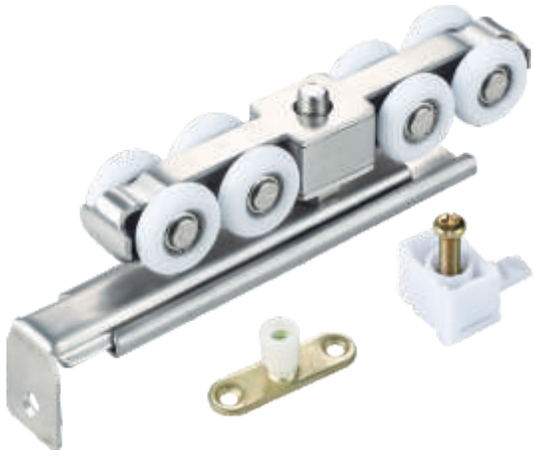

TSD-8W
Sliding Door Wheel Set
(Elight Wheel SS Body)
Compatible with Track TST-02
₹ 1190/Set

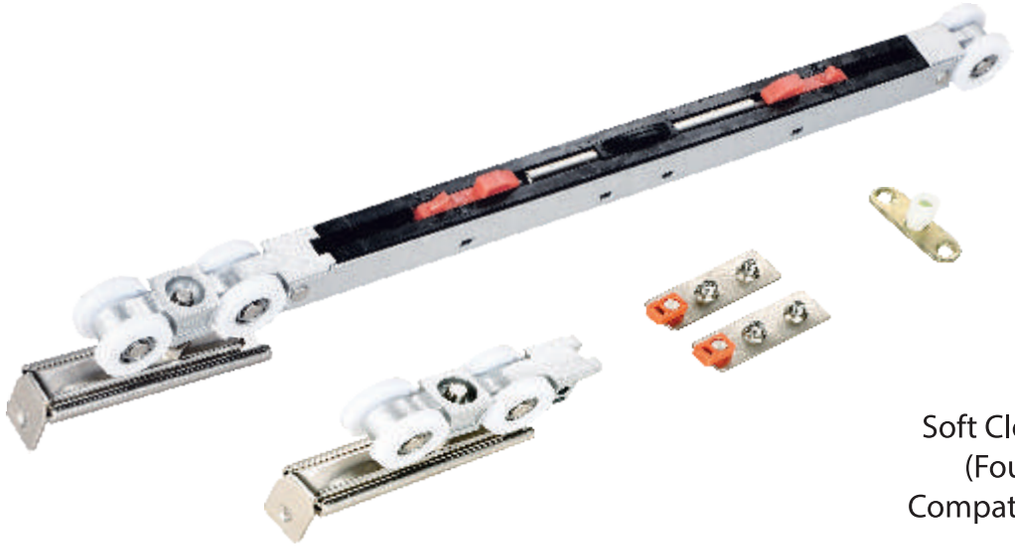

SOFT CLOSE

TSD-SC
Soft Close Sliding Wheel Set
(Four Wheel SS Body)
Compatible with Track TST-03
₹ 3640/Set

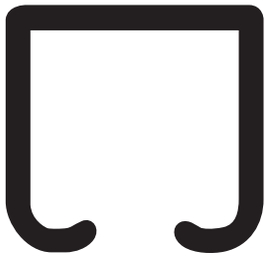

TST-02
Compatible With
TSD-4W & TSD-8W
₹ 200/Feet

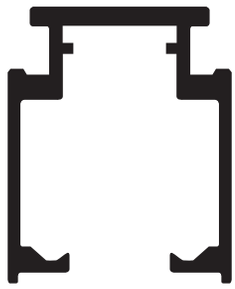

TST-03
Compatible with TSD-SC
₹ 280/Feet

DRAWER CHANNEL

STAINLESS STEEL DRAWER SLIDE

Code	Size	Pair/Box	Price/pair
TTC-10SS	10"(250mm)	10	561.00
TTC-12SS	12"(300mm)	10	612.00
TTC-14SS	14"(350mm)	10	714.00
TTC-16SS	16"(400mm)	10	816.00
TTC-18SS	18"(450mm)	10	918.00
TTC-20SS	20"(500mm)	10	1020.00
TTC-22SS	22"(550mm)	10	1122.00
TTC-24SS	24"(600mm)	10	1224.00

SOFT CLOSE STAINLESS STEEL DRAWER SLIDE

Code	Size	Pair/Box	Price/pair
TTC-10SSSC	10"(250mm)	10	830.00
TTC-12SSSC	12"(300mm)	10	915.00
TTC-14SSSC	14"(350mm)	10	995.00
TTC-16SSSC	16"(400mm)	10	1080.00
TTC-18SSSC	18"(450mm)	10	1165.00
TTC-20SSSC	20"(500mm)	10	1260.00
TTC-22SSSC	22" (550mm)	10	1350.00
TTC-24SSSC	24" (600mm)	10	1435.00

BED CHANNEL

HEAVY DUTY BED SLIDE

Code	Size	Pair/Box	Price/pair
TTC-20HD	20"(500mm)	5	1640.00
TTC-24HD	24"(600mm)	5	1945.00
TTC-30HD	30"(750mm)	5	2430.00
TTC-36HD	36"(900mm)	5	2915.00

DRAWER CHANNEL

PLATINUM DRAWER SLIDE (45 KG)

Code	Size	Pair/Box	Price/pair
TTC-8Z	8" (200mm)	10	220.00
TTC-10Z	10" (250mm)	10	260.00
TTC-12Z	12" (300mm)	10	312.00
TTC-14Z	14" (350mm)	10	364.00
TTC-16Z	16" (400mm)	10	416.00
TTC-18Z	18" (450mm)	10	468.00
TTC-20Z	20" (500mm)	10	520.00
TTC-22Z	22" (550mm)	10	572.00
TTC-24Z	24" (600mm)	10	624.00
TTC-30Z	30" (750mm)	10	780.00
TTC-36Z	36" (900mm)	10	936.00

(Also Available in Black Powder Coated)

SUPREME DRAWER SLIDE (35 KG)

Code	Size	Pair/Box	Price/pair
TTC- 8 ZLTE	8"(200mm)	10	239.00
TTC- 10 ZLTE	10"(250mm)	10	279.00
TTC- 12 ZLTE	12"(300mm)	10	319.00
TTC- 14 ZLTE	14"(350mm)	10	359.00
TTC- 16 ZLTE	16"(400mm)	10	399.00
TTC- 18 ZLTE	18"(450mm)	10	429.00
TTC- 20 ZLTE	20"(500mm)	10	449.00

(Also Available in Black Powder Coated)

PUSH TO OPEN DRAWER SLIDE

Code	Size	Pair/Box	Price/pair
TTC-20PO	20"(500mm)	10	920.00

TWAZO
Architectural Hardware...

CABINET HINGE

Specification:

Manufactured from high grade steel for longevity
Clip on mechanism for easy installation and removal of shutters
Provides ease in maintenance of cabinet
Wide opening angle for easy storage in cabinet
Nickle plated for corrosion resistance
Shutter cavity: Ø 35mm, 11.5mm deep

SOFT CLOSE

REGULAR AUTO CLOSE HINGES

Code	Crank	Pair/Box	Pair/Case	Price/pair
TACH-00	0	-	100	96.00
TACH-08	8	-	100	96.00
TACH-15	15	-	100	96.00

SOFT CLOSE

CABINET HINGE 2D

Code	Crank	Pair/Box	Pair/Case	Price/pair
TSC2D-00	0	5	100	220.00
TSC2D-08	8	5	100	220.00
TSC2D-15	15	5	100	220.00

STAINLESS STEEL CABINET HINGE 2D

Code	Crank	Pair/Box	Pair/Case	Price/pair
TSC2D-00SS	0	5	100	350.00
TSC2D-08SS	8	5	100	350.00
TSC2D-15SS	15	5	100	350.00

SOFT CLOSE

CABINET HINGE 3D

Code	Crank	Pair/Box	Pair/Case	Price/pair
TSC3D-00	0	5	100	350.00
TSC3D-08	8	5	100	350.00
TSC3D-15	15	5	100	350.00

STAINLESS STEEL CABINET HINGE 3D

Code	Crank	Pair/Box	Pair/Case	Price/pair
TSC3D-00SS	0	5	100	420.00
TSC3D-08SS	8	5	100	420.00
TSC3D-15SS	15	5	100	420.00

SOFT CLOSE

165° CABINET HINGE

Code	Crank	Pc/Pkt	Pcs./Case	Price/Pc.
TSC-165	0	1	50	380.00

DRAWER BOX

Specifications:

Equipped With Concealed Syncronised Full Extension Slide.
Tool Free Front Assembly.
2 Dimentional Function Adjusment Up/Down Left/Right.
Soft Close for Silent & Effortless closing Action
Load Capacity upto 35 kg.

DRAWER BOX (GREY)

Code	Size	Set/case	Price/Set
TDB-2004G	500mm	6	2850.00
TDB-2006G	500mm	6	3350.00
TDB-2008G	500mm	6	3750.00

DRAWER BOX (WHITE)

Code	Size	Set/case	Price/Set
TDB-2004W	500mm	6	2850.00
TDB-2006W	500mm	6	3350.00
TDB-2008W	500mm	6	3750.00

SLIM DRAWER BOX

Code	Size	Set/case	Price/Set
TSDB-2004	500mm	6	3280.00
TSDB-2006	500mm	6	3680.00
TSDB-2008	500mm	6	4000.00

WARDROBE SLIDING FITTING

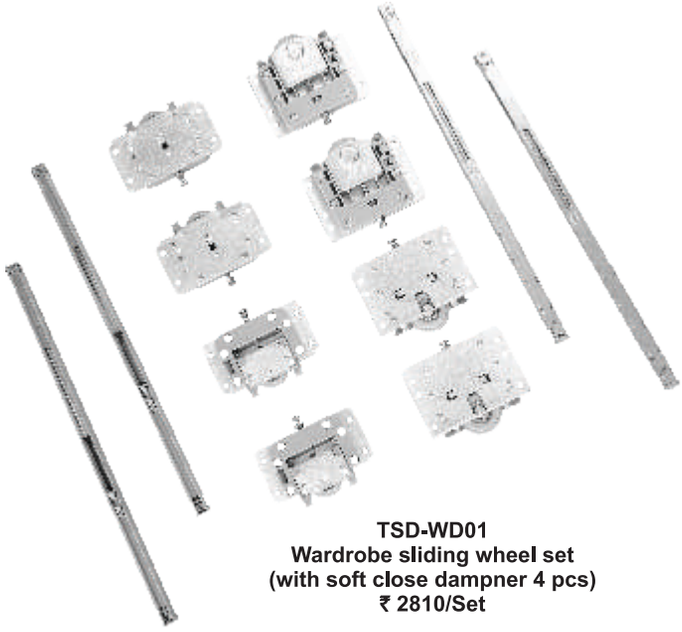

TSD-WD01
Wardrobe sliding wheel set
(with soft close dampner 4 pcs)
₹ 2810/Set

Upper track

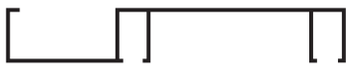

Lower track

TST-01
Top/Bottom track for TSD-WD01
Available in 8' & 13'
₹ 300/Feet

Great functionality

- 2 way soft close for the top
- High-grade soft closing systems

Superior performance

- Weight carrying capacity of 50 kg
- Rollers on top and bottom for more steady movement & better adjustment

Sturdy

- Door thickness from 16 mm to 25mm

Easy to install

- No grooving required to fit the tracks on to the cabinet
- No measurements required to install tracks and hardware
- Simple and intuitive parts for easy installation
- Quick and easy tool less adjustment and locking

Durable

- Tested for 30,000 cycles

Adaptable

- Height adjustment of up to 13 mm
- Track lengths available: 8' & 13'

Great Aesthetics

- Super slim top track - only 14 mm height

SOFT CLOSE

FLOOR SPRING

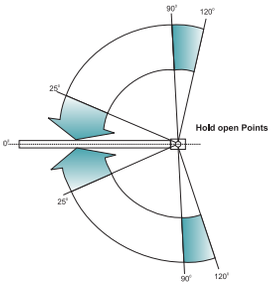

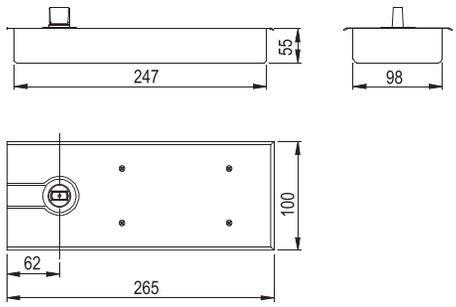

TFS-65
Single Spring Floor Hinge
₹ 3070.00

Specification
General design, suitable for left or right hand to open the door in single and both sides.
Closing force-19nm.
Maximum wide door leaf-900mm.
Maximum bearing weight-80kgs
Speed covering control-two stage adjustable speed.
Location-90^0 hold open
Cover plate finish : SSS

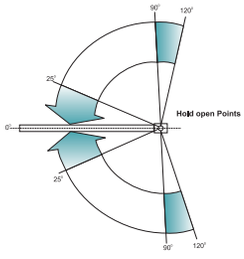

TFS-84
Double Spring Floor Hinge
₹ 5175.00

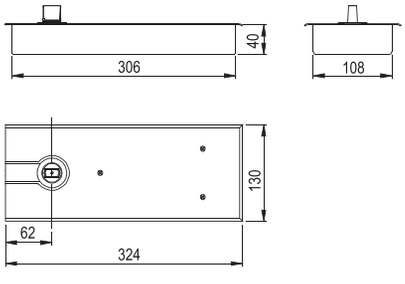

Specification
General design, suitable for left or right hand to open the door in single and both sides.
Closing force-25nm.
Maximum wide door leaf-1200mm.
Maximum bearing weight-100-130kgs
Speed covering control-two stage adjustable speed.
Location-90^0 hold open
Cover plate SS 304
Cover plate finish : SSS

COMBO PATCH SET

SS 304

TFS-65

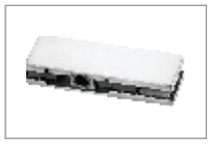

TPF-10

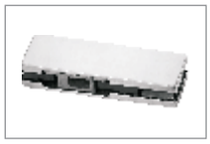

TPF-20

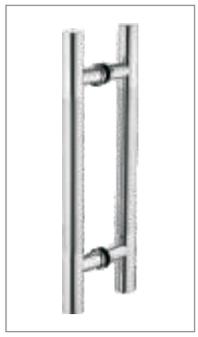

TDH-02

TPL-10

TPDP

Case of 4 Set

T-65TBLHP COMBO PATCH SET 65 ₹ 8550.00	
Code	**Item**
TFS-65	Single Spring Floor Hinge
TPF-10	Top Patch
TPF-20	Bottom Patch
TPL-10	Corner Patch Lock
TDH-02	Round H-Handle (32x302x450)
TPDP	Top Pivot

T-65TBP PATCH SET 65 ₹ 5430.00	
Code	**Item**
TFS-65	Single Spring Floor Hinge
TPF-10	Top Patch
TPF-20	Bottom Patch
TPDP	Top Pivot

TFS-84

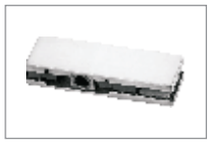

TPF-10

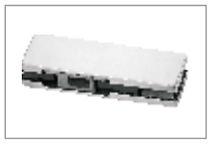

TPF-20

Case of 2 Set

T-84TBLHP COMBO PATCH SET 84 ₹ 10660.00	
Code	**Item**
TFS-84	Double Spring Floor Hinge
TPF-10	Top Patch
TPF-20	Bottom Patch
TPL-10	Corner Patch Lock
TDH-02	Round H-Handle (32x302x450)
TPDP	Top Pivot

T-84TBP PATCH SET 84 ₹ 7540.00	
Code	**Item**
TFS-84	Double Spring Floor Hinge
TPF-10	Top Patch
TPF-20	Bottom Patch
TPDP	Top Pivot

HYDRAULIC PATCH

SS 304

Maximum open degree Left side 150^0 Right side 150^0
90^0 Hold- Open Function
Closing Speed 150^0- 10^0
Buffering Speed 10^0- 0^0
Adjustment can be individually
Hold open at 90^0

THFS-100
Hydraulic Floor Hinge
₹ **8450.00**

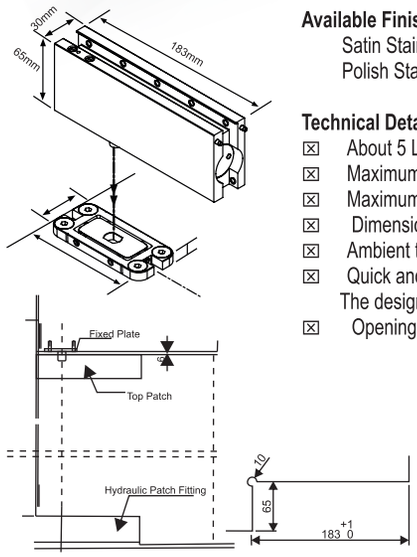

Available Finish
Satin Stainless Steel
Polish Stainless Steel

Technical Details
- ☒ About 5 Lakh cycles tested
- ☒ Maximum door width 1000mm
- ☒ Maximum door weight 90kgs
- ☒ Dimension : 183x30x65mm
- ☒ Ambient temperature 20^{0}C~+50^{0}C
- ☒ Quick and easy installation
  The design no need drill/hole on the floor, making installation easier.
- ☒ Opening Lightly, Close Smoothyl

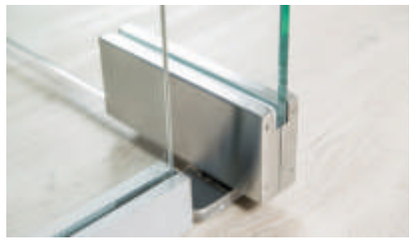

PATCH FITTINGS

TPF-10
Top Patch
₹ **1090.00**

TPF-20
Bottom Patch
₹ **1090.00**

TPF-30
Wall Mounted Over Panel Patch with Pivot (Over Panel)
₹ **1460.00**

TPF-40
Over Panel Side Panel Connecting Patch with Pivot (Big L)
₹ **1820.00**

TPL-10
Corner Patch Lock with Strike Plate
₹ **2000.00**

TPF-610
Over Panel Side Panel Patch Connector (Small L)
₹ **1460.00**

TPF-640
Wall to Glass Connecting Patch
₹ **570.00**

TPF-650
Glass to Glass Connecting Patch with Wall/Ceiling
₹ **675.00**

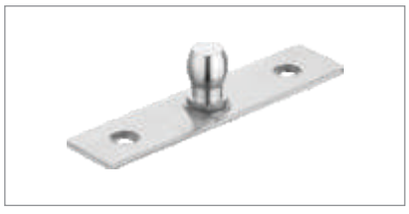

TGDP
Top Pivot
for Patch Fittings Doors
₹ **185.00**

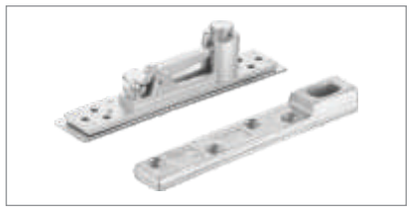

TP/BP
Top Pivot/Bottom Pivot
for Wooden/Aluminium Doors
₹ **415.00**

THRDS
Half Round Door Stopper
₹ **195.00**

SHOWER HINGES

SS 304

Specification:
Material: SS 304
Door Thickness: 8mm-12mm
Weight Capacity: 45kg
Finish: Chrome Plated

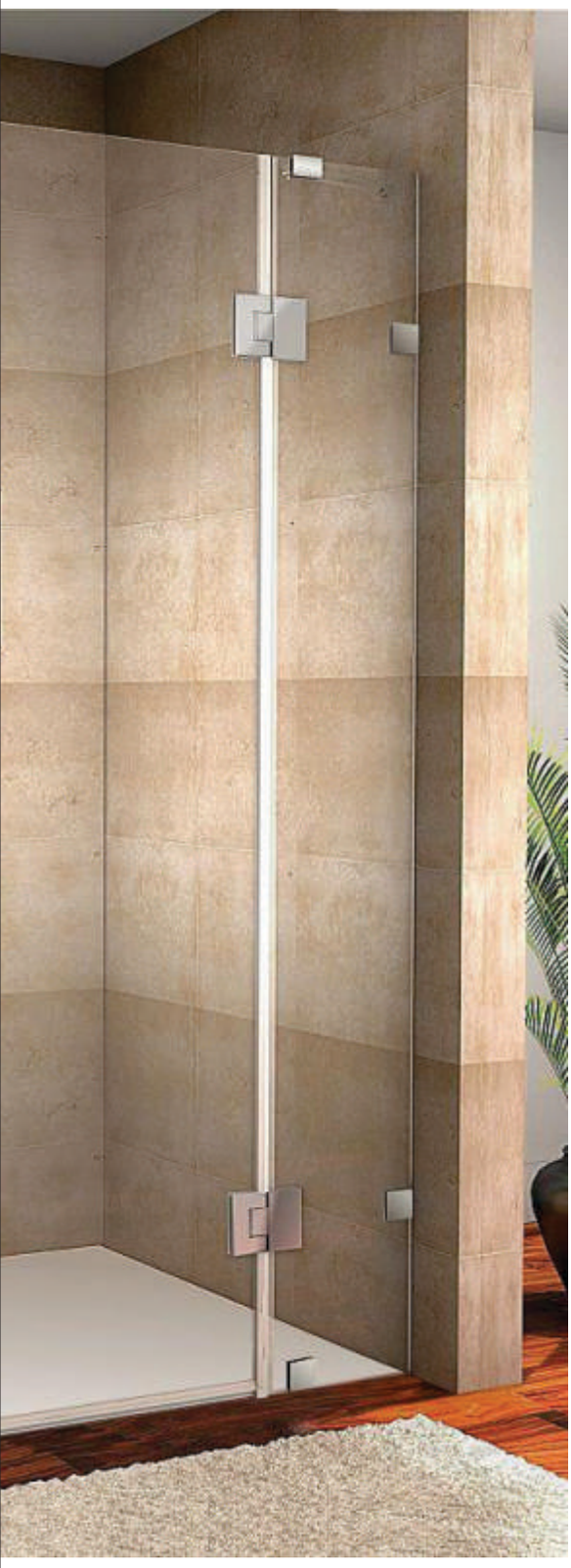

TSH-111 H/P
Wall to Glass 90° Off Set Hinge
₹ **1750.00**

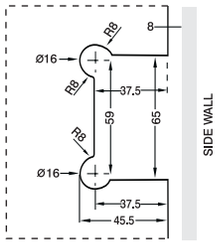

TSH-111
Wall to Glass 90° Hinge
₹ **1750.00**

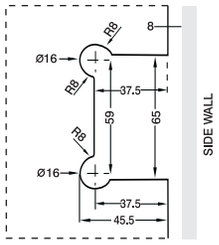

TSH-222
Glass to Glass 180° Hinge
₹ **2925.00**

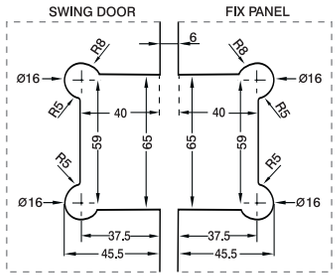

TSH-333
Glass to Glass 135° Hinge
₹ **2925.00**

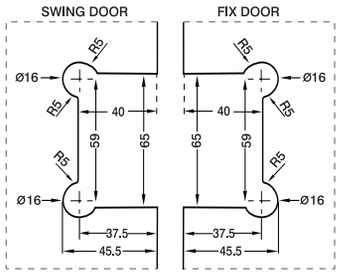

TSH-444
Glass to Glass 90° Hinge
₹ **3120.00**

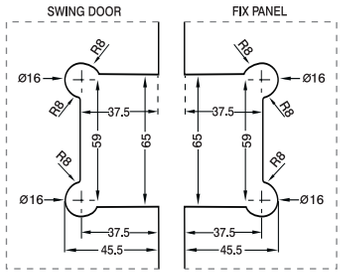

TSH-555
Wall to Glass 90° Fix Bracket
₹ **1625.00**

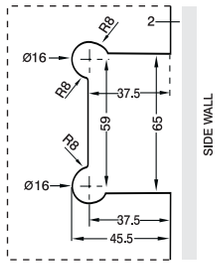

GLASS CONNECTORS

SS 304

TGC-1
U Connector

₹ 275.00 (4mm)
₹ 235.00 (3mm)

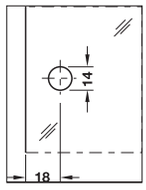

TGC-2
Glass to Glass 135°

₹ 415.00 (4mm)
₹ 350.00 (3mm)

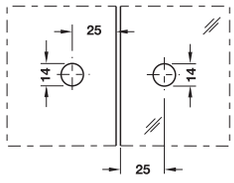

TGC-3
Glass to Glass 90°

₹ 415.00 (4mm)
₹ 350.00 (3mm)

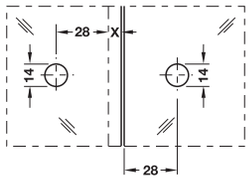

TGC-4
L Connector

₹ 325.00 (4mm)
₹ 260.00 (3mm)

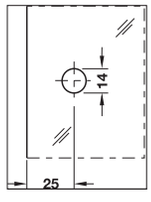

TGC-5
Glass to Glass 180°

₹ 415.00 (4mm)
₹ 350.00 (3mm)

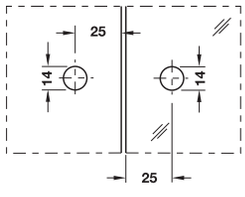

TGC-6
Glass to Glass 90°

₹ 545.00 (4mm)
₹ 455.00 (3mm)

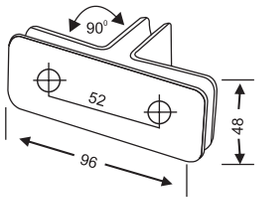

Specification:
Material: SS 304
Door Thickness: 8mm-12mm
Weight Capacity: 45kg
Finish: Chrome Plated

TWAZO
Architectural Hardware...

SHOWER KNIGHT ACC.

Round Series (SS 304 / Brass)

TKH-1 ₹ **325.00**
Wall to Rod (Dia 19mm)

TKH-2 ₹ **365.00**
Rod to Glass (Dia 19mm)

TKH-3 ₹ **635.00**
Rod to Rod (Dia 19mm)

TKH-4 ₹ **415.00**
Rod to Glass (One Side Blind)

TKH-5 ₹ **495.00**
Rod to Rod T Connector (Dia 19mm)

TKH-ACC-19 ₹ **275.00** (Per Ft.)
Reinforcing Rod (Dia 19mm)

Square Series (SS304) Dia 25mm

TKH-11 ₹ **455.00**
Wall to Rod (Dia 25mm)

TKH-22 ₹ **495.00**
Rod to Glass (Dia 25mm)

TKH-33 ₹ **885.00**
Rod to Rod (Dia 25mm)

TKH-44 ₹ **600.00**
Rod to Glass (One Side Blind)

TKH-55 ₹ **885.00**
Rod to Rod T Connector (Dia 25mm)

TKH-ACC-25x25 ₹ **405.00** (Per Ft.)
Connecting Track

TKH-111 ₹ **455.00**
Wall to Track

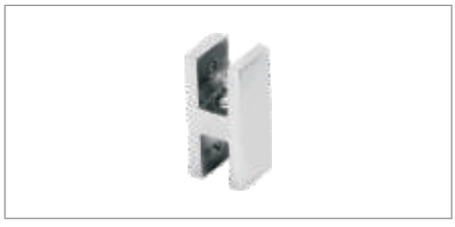

TKH-222 ₹ **470.00**
Track to Glass

TKH-333 ₹ **910.00**
Track to Track Connector

TKH-ACC-10x30 ₹ **325.00** (Per Ft.)
Connecting Track

SHOWER SLIDING SET

TSL-11-A1
Roller

Shower Sliding System Set
TSL-11-A1 - 2 Big Rollers, 2 Small Rollers
TSL-11-A2 - 2 Track to Glass Holder
TSL-11-A3 - 2 Stopper
TSL-11-A4 - 1 Floor Guide
TSL-11-A5 - 2 Wall to Track Connector
TSL-HN-50 - 1 Sliding Round Handle

₹ 9620.00

TSL-11-A2
Track to Glass Holder

TSL-11-A3
Stopper

TSL-11-A4
Floor Guide

TSL-11-A5
Wall to Track Connector

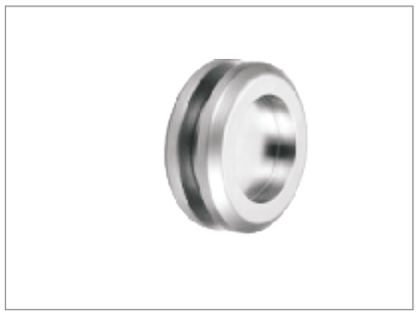

TSL-HN-50
Sliding Handle (Dia 50mm)

TKH-ACC-10/30 **₹ 325.00 (Per Ft.)**
Connecting Track (Available in 1.5 Mt, 1.8 Mt & 2.1 Mt)

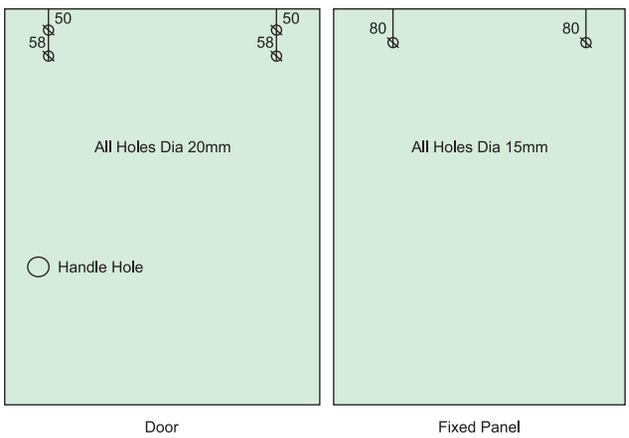

Door Fixed Panel

TWAZO
Architectural Hardware...

SLIDING SYSTEM

TSL-44-A1 (Set)
Roller (S.S.)
TSL-44-A1 - 2 Rollers
TSL-44-A3 - 2 Stopper
TSL-44G - 1 Floor Guide

₹ 2730.00

CUTOUT DETAILS OF TSL-44-A1

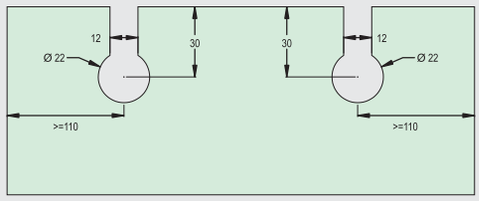

TSL-44-A2 (Set)
Roller (Brass/SS)
TSL-44-A2 - 2 Rollers
TSL-44-A3 - 2 Stopper
TSL-44G - 1 Floor Guide

₹ 4030.00

CUTOUT DETAILS OF TSL-44-A2

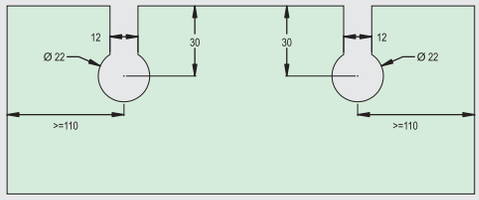

TSL-44-R8 (Set)
8 Wheel Rectangular Roller (S.S.)
TSL-44-R8 - 2 Rollers
TSL-44-A3 - 2 Stopper
TSL-44G - 1 Floor Guide

₹ 2200.00

CUTOUT DETAILS OF TSL-44-R8

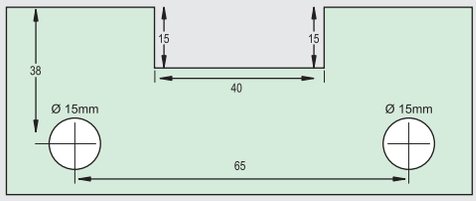

TSL-44-A3 ₹ **235.00**
Stopper

TSL-44-A5 ₹ **310.00**
Wall to Track Clamp

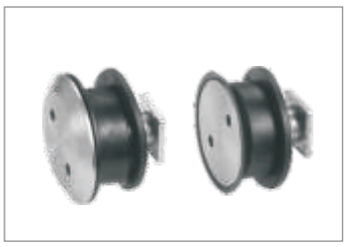

TSL-44-A6 ₹ **455.00**
Glass to Track Clamp

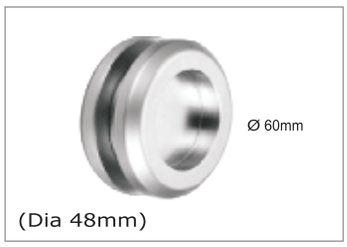

TSL-HN-50 ₹ **980.00 (H)**
Sliding Handle ₹ **650.00 (L)**

TSL-HN-60 ₹ **1040.00**
(Hollow) Sliding Handle

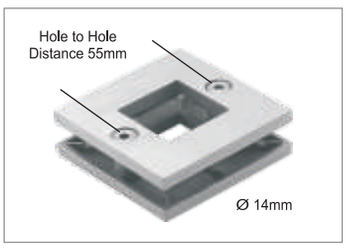

TSL-HN-70 ₹ **1275.00**
Sliding Handle (Square)

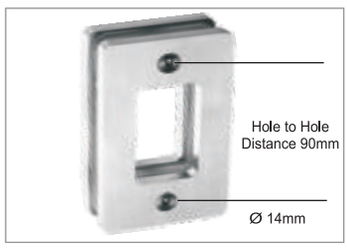

TSL-HN-80 ₹ **1450.00**
Sliding Handle (Rectangle)

TSL-HN-10 ₹ **1690.00**
Sliding Handle (Rectangle)

TSL-44G ₹ **325.00**
Floor Guide

TSL-44-B1 ₹**390.00(Per Ft.)**
Aluminium Track (Single)
Available in 8,10 & 13 Ft.

TSL-44-B2 ₹**650.00(Per Ft.)**
Aluminium Track (Double Door)
Available in 8,10 & 13 Ft.

TSL-44-B3 ₹**495.00(Per Ft.)**
Aluminium Track (Door+Fix Glass)
Available in 8,10 & 13 Ft.

PLASTIC PROFILES

* FINISH : Transparent

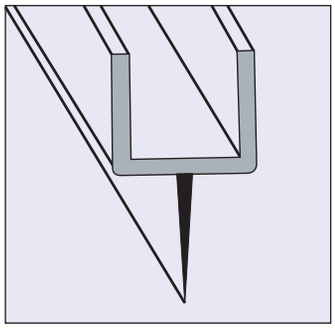

TPS-2 Centre Seal		
8mm	(2.2mtr.)	₹ **170.00**
10mm	(2.2mtr.)	₹ **170.00**
12mm	(2.2mtr.)	₹ **195.00**

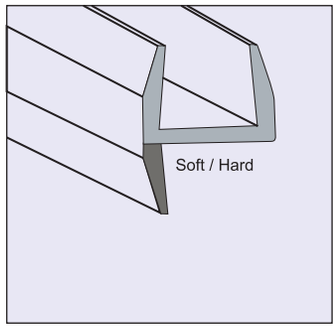

TPS-3 Side Seal		
8mm	(2.2mtr.)	₹ **170.00**
10mm	(2.2mtr.)	₹ **170.00**
12mm	(2.2mtr.)	₹ **195.00**
12mm	(2.5mtr.)	₹ **195.00**

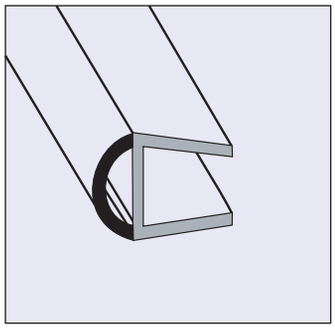

TPS-4 D Seal		
8mm	(2.2mtr.)	₹ **170.00**
10mm	(2.2mtr.)	₹ **170.00**
12mm	(2.2mtr.)	₹ **195.00**
12mm	(2.5mtr.)	₹ **195.00**

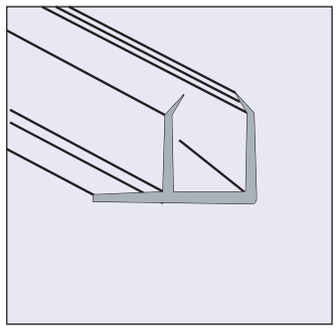

TPS-6 Sliding Door Seal		
8mm	(2.2mtr.)	₹ **170.00**
10mm	(2.2mtr.)	₹ **170.00**
12mm	(2.2mtr.)	₹ **195.00**
12mm	(2.5mtr.)	₹ **195.00**

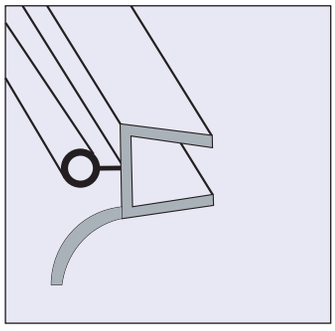

TPS-7 Water Dispersal Seal		
8mm	(2.2mtr.)	₹ **260.00**
10mm	(2.2mtr.)	₹ **260.00**

Magnetic Profiles

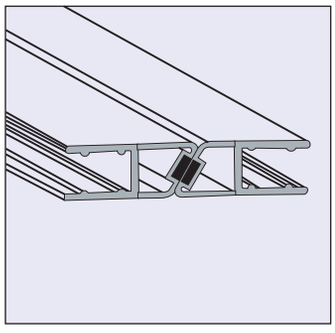

TPS-M1 180°		
8mm	(2.2mtr.)	₹ **910.00**
10mm	(2.2mtr.)	₹ **910.00**
10mm	(2.5mtr.)	₹ **1105.00**
12mm	(2.2mtr.)	₹ **1105.00**

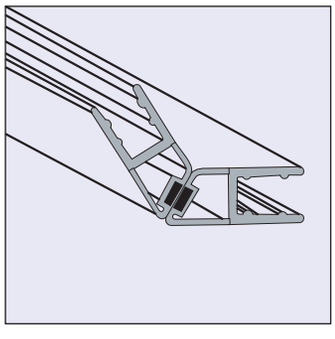

TPS-M2 135°		
8mm	(2.2mtr.)	₹ **910.00**
10mm	(2.2mtr.)	₹ **910.00**
10mm	(2.5mtr.)	₹ **1105.00**
12mm	(2.2mtr.)	₹ **1105.00**

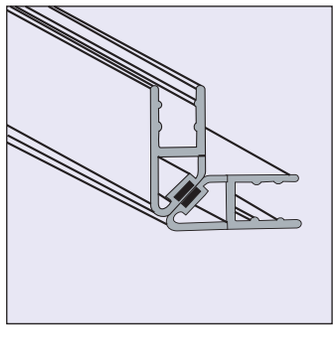

TPS-M3 90°		
8mm	(2.2mtr.)	₹ **910.00**
10mm	(2.2mtr.)	₹ **910.00**
10mm	(2.5mtr.)	₹ **1105.00**
12mm	(2.2mtr.)	₹ **1105.00**

LOCKS WITHOUT CUTOUT

SLIDING DOOR LOCK

TSDL-13A+13C ₹ **6500.00**
Sliding Door Lock
with Strike Plate

TSDL-13A+13B ₹ **9100.00**
Sliding Door Lock
with Strike Box

TLK-01 ₹ **1430.00**
Double Door Lock
(Only Key)

TLK-02 ₹**1170.00**
Single Door Lock
(Only Key)

TLK-03 ₹ **1560.00**
Double Door Lock
(Key & Knob)

TLK-04 ₹ **1300.00**
Single Door Lock
(Key & Knob)

TLK-07 ₹ **1495.00**
Double Door Lock
(Key & Knob)

TLK-08 ₹ **1225.00**
Single Door Lock
(Key & Knob)

TLK-13 ₹ **1430.00**
Double Door Lock
(Only Knob)

TLK-14 ₹ **1170.00**
Single Door Lock
(Only Knob)

TWAZO
Architectural Hardware...

DOOR HANDLES

ROUND D-HANDLE

TDH-01

Size	₹/Per Pair
25x302x327	910.00
32x450x482	1460.00

ROUND H-HANDLE

TDH-02

Size	₹/ Per Pair
25x240x325	910.00
32x302x457	1365.00
32x455x600	1640.00
32x600x900	2275.00
32x900x1200	2912.00
32x1200x1500	3640.00

S-HANDLE

TDH-03

Size	₹/Per Pair
32x302x457	1640.00

SQUARE D-HANDLE

TDH-04

Size	₹/Per Pair
25/25x302x327	1640.00
30/30x450x480	2000.00

DOTTED H-HANDLE

TDH-05

Size	₹/Per Pair
25x200x325	1365.00
32x302x457	1730.00
32x455x600	2300.00

OVAL WOOD HANDLE

TDH-06

Size	₹/Per Pair
25/45x302x450	2185.00

ACRYLIC HANDLE

TDH-07

Size	₹/Per Pair
38x302x480	3120.00
38x450x600	3510.00

WOOD SS HANDLE

TDH-08

Size	₹/Per Pair
38/25x302x450	2210.00

TWAZO
Architectural Hardware...

DOOR HANDLES

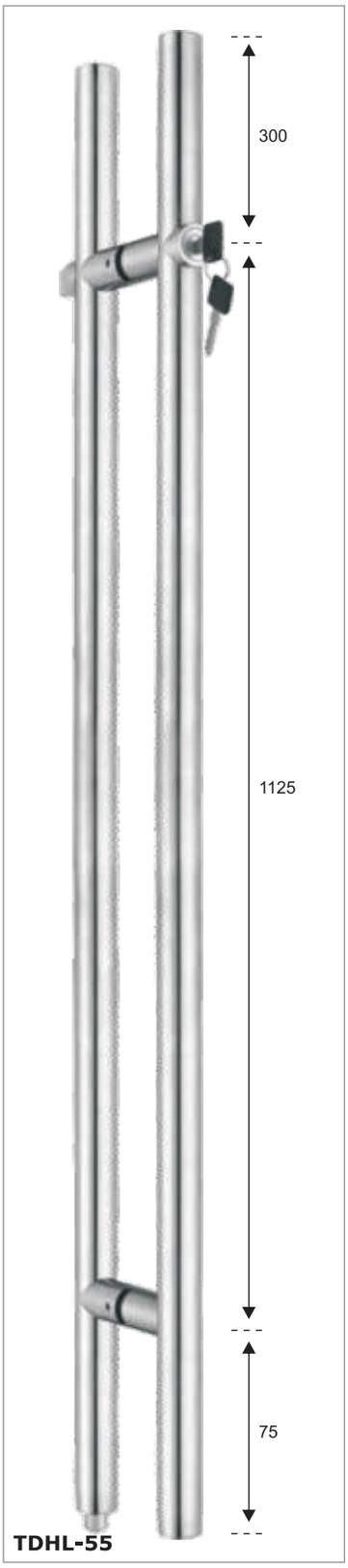

TDHL-55

Size	₹/Per Pair
35x1500	14300.00

TOWEL BAR HANDLES

TDH-TB-01

SIZE	₹/ Per Pair
19x152x457CC (SS 304)	**1365.00**
25x152x457CC (SS 202)	**1325.00**

TDH-TB-02

SIZE	₹/ Per Pair
15/30x152x457 (SS 202)	**1560.00**

TDH-TB-03 (WITH KNOB)

SIZE	₹/ Per Pair
19x152x457CC (SS 304)	**1690.00**
25x152x457CC (SS 304)	**2080.00**

DOOR KNOBS

TDK-1
₹ 455.00

TDK-2
₹ 455.00

TDK-3
₹ 455.00

FRICTION STAY HINGE

Size	Pcs./Box	₹/ Per Pair
8" (2mm)	50	254.00
10" (2mm)	50	273.00
12" (2mm)	50	299.00
14" (2mm)	50	325.00
16" (2.5mm)	40	442.00
18" (2.5mm)	40	494.00
20" (3mm)	25	735.00
24" (3mm)	25	832.00

NOTES.

NOTES.

TWAZO

Architectural Hardware...

printganpati@gmail.com # 9711847059

An ISO 9001 2015 Certified Company

TWITS HARDWARE CORPORATION
G-211, Sector-3, DSIDC
Bawana Industrial Area, New Delhi - 110039
Website: www.twazo.in
Email: info@twazo.in

DEALER / DISTRIBUTER

Prices are subject to change without prior notice.
Product photo show in catalogue are only the visual and may be differ from original. Please refer the original product for toughen glass cutout.